Plan # 004

Disc Sander Jig

Fig.1

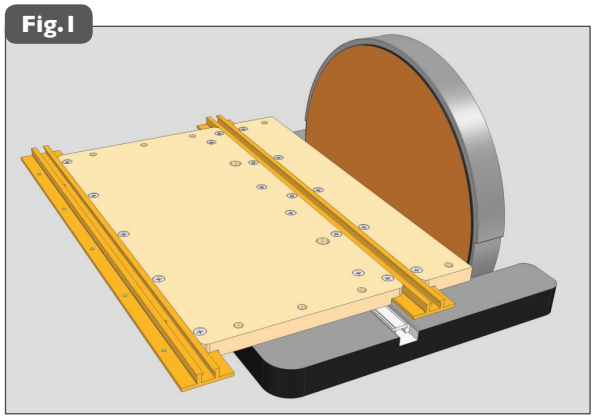

Fig.2

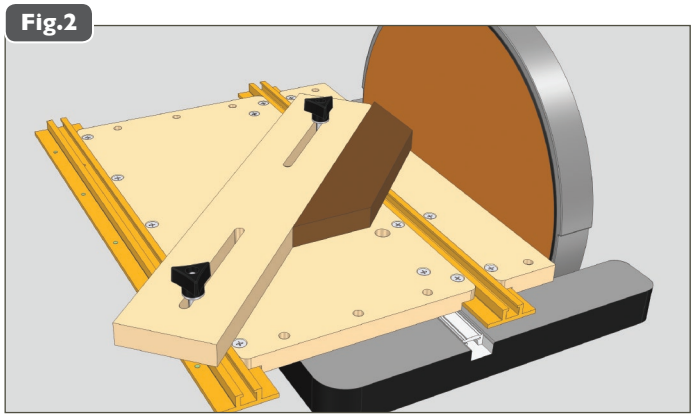

Build-It Platform Components Required:

- 2 Small Build-It Panels or 1 Small & 1 Large
- 1 Miter Slider
- 2 T-Slot Panel Connectors

Just add:

- Build-It Knobs

Sanding end grain can be a chore. It's difficult enough just because it's the hardest part of the board to remove saw marks from. Add to that the small surface area and you run into problems keeping the surface square and flat as you sand. This little sanding jig makes handling pieces small and large a snap, taking advantage of the power sanding capabilities of a disc sander while providing support for the workpiece. It can be used as a slider, allowing you to maintain even wear across the face of the sanding disc. If your pieces are really small, you can lock the Miter Slider in place and just slide your work piece down the fence to the sanding disc.

Add a Miter Slider and (2) T-Slot Panel Connectors to a small Build-It Panel and place in the miter slot at your disc sander. Adjust the Miter Slider to fit your slot. Cut a piece from another Build-It Panel to fill the gap between the existing assembly and your sanding disc. Cut the slots in the fence as shown then attach with (2) 1/4-20 x 1-1/2" hex bolts with washers and Build-It Knobs. The slotted holes permit adjustment to almost any angle. **Caution: If you have a small side table on your disc sander, you should only use this jig with the Miter Slider "locked" in the slot to create a stationary jig.**

Fig.3

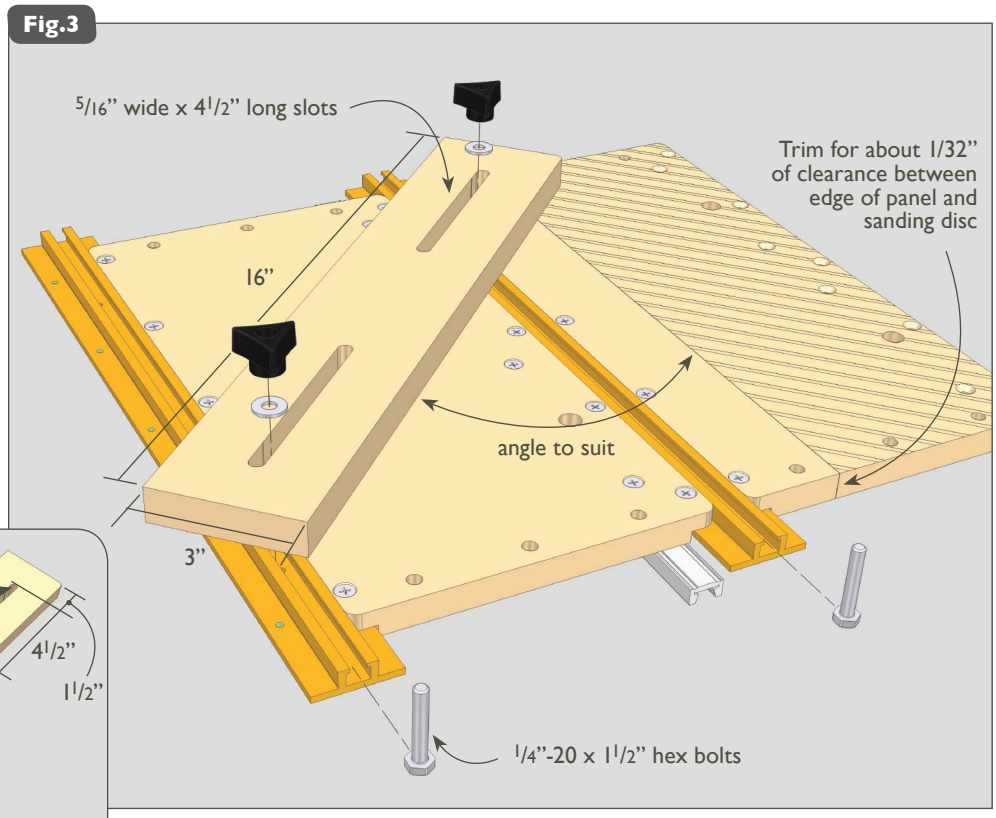

Detail 3A

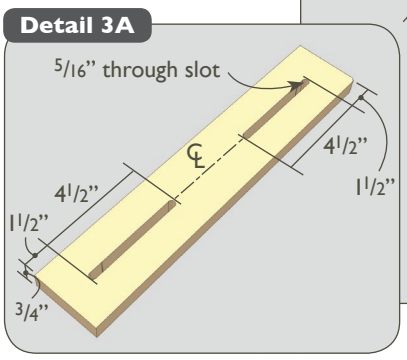

©2007 by Taylor Design Group. All rights reserved.